ThermOmegaTech®

AMBIENT VS. FLUID SENSING

FOR EMERGENCY SHOWER AND EYEWASH STATIONS

DEFINITIONS

The **HAT/FP** freeze protection valve and **HAT/SP** scald protection valve can be installed in either the ambient sensing or fluid sensing orientation, depending on application needs.

Ambient Sensing: (*Standard Flow*) Valves installed in this flow direction will respond to ambient temperature to initiate flow and then respond to water temperature once flow is established.

Fluid Sensing: (*Reverse Flow*) Valves installed in this flow direction will respond to water temperature at the point of installation to initiate flow and continue to respond to water temperature once flow is established.

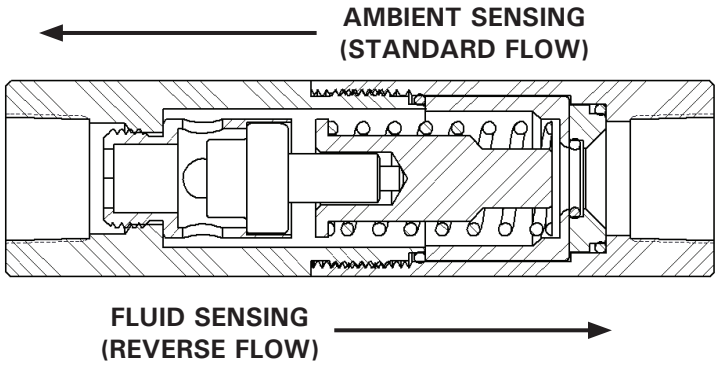

OPERATION

HAT/FP valve will remain closed until the sensed temperature falls to the valve's open set-point. It will then modulate open and establish flow, responding to the temperature of the water. The valve will modulate closed as the water warms up and will close once the temperature sensed rises to 5˚F above the open set-point.

HAT/SP valve will remain closed until the sensed temperature rises to the valve's open set-point. It will then modulate open and establish flow, responding to the temperature of the water. The valve will modulate closed as the water cools down and will close once the temperature sensed falls to 10˚F below the open set-point.

ADVANTAGES OF EACH

Ambient Sensing: responds to atmospheric temperature changes before fluid temperature changes; more conservative choice, opens sooner than fluid sensing on dropping temperatures; more tolerant of dirty water; good choice for warmer climates.

Fluid Sensing: use as a backup with insulated piping or heat tracing; good choice for colder climates - results in less nuisance dumping/draining.

SAMPLE INSTALLATION

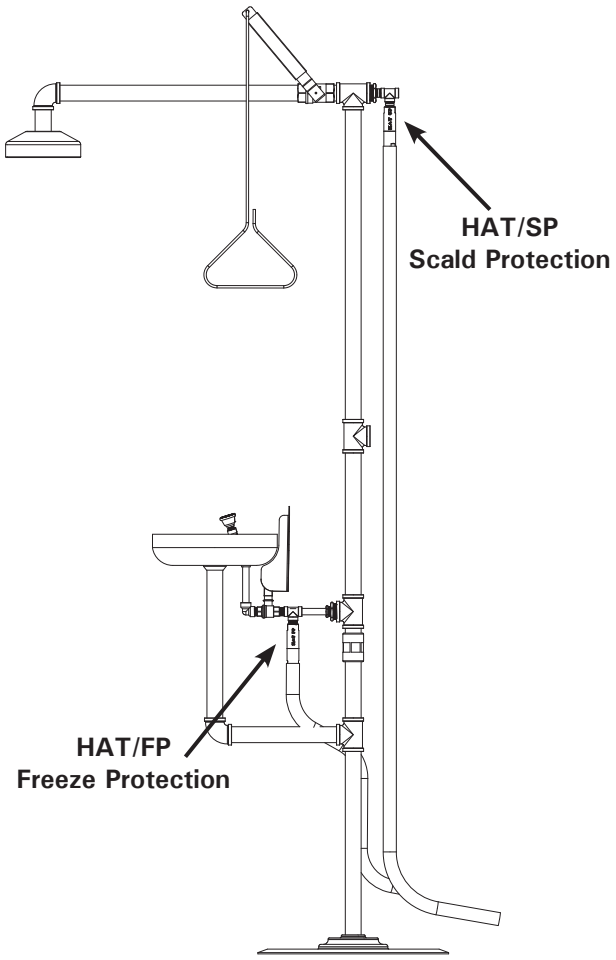

ThermOmegaTech®, Inc.
353 Ivyland Road
Warminster, PA 18974
1-877-379-8258
www.ThermOmegaTech.com

AS vs. FS
Rev: 11/19/2020